Marea Lounge Chair

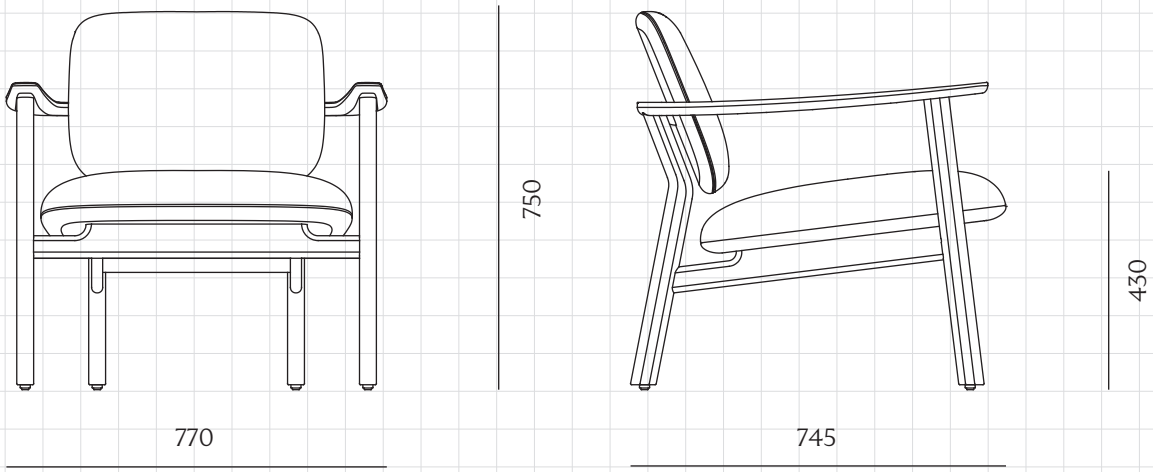

CODE	MR-S111
DIMENSIONS	W770 x D745 x H750mm Seating height: 430mm
NET WEIGHT	21.0 kg
ENVIRONMENT	Indoor
MATERIALS	Solid wood frame, stainless steel hairline aged gold, upholstered seat shell *Please refer to website or contact your local representative for complete material swatches.

SHIPPING

Package	Assembled		
Package Qty	1 pcs/box		
Packaging	**Measurement (mm)**	**Volume (cbm)**	**Gross Weight (kg)**
FCL	W835 x D810 x H835	0.56	27.87
LCL/AIR	W875 x D850 x H925	0.69	36.51